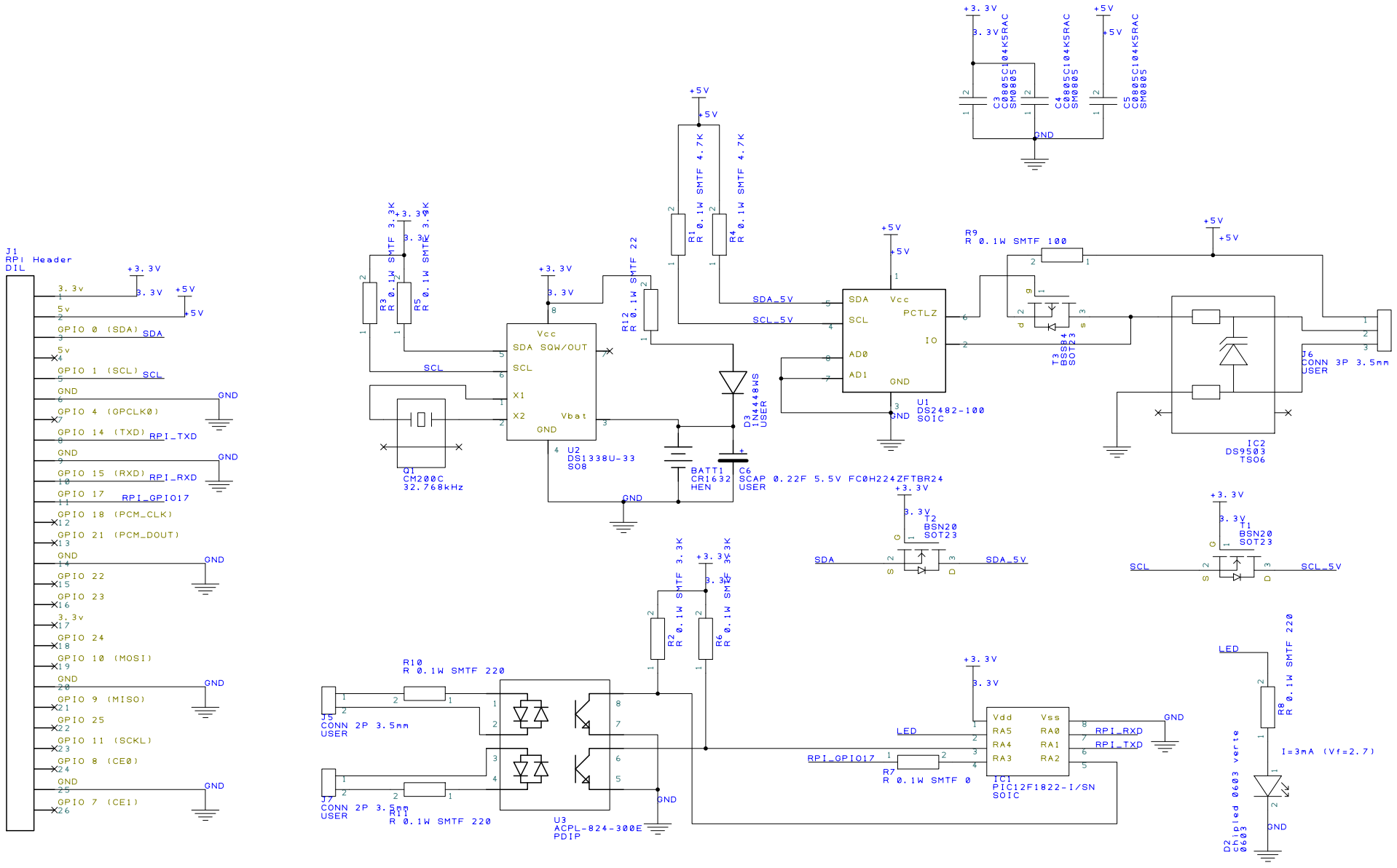

E	D	C	B	A	Drawn	Check	Projection Do Not Scale	Raspberry Pi Home Automation Shield
Drn	Drn	Drn	Drn	Project			Client	
Chk	Chk	Chk	Chk	Title			Filename	Drawing No. V2 / Sheet of