EVBSFM1xR User Manual

Rev.11

SEONG JI

Jun. 30, 2020

Contents

Model	F/W
EVBSFM10R1AT	-
EVBSFM10R2AT	-
EVBSFM11R3AT	-
EVBSFM10R4AT	-

Hard Ware

Evaluation Kit Component

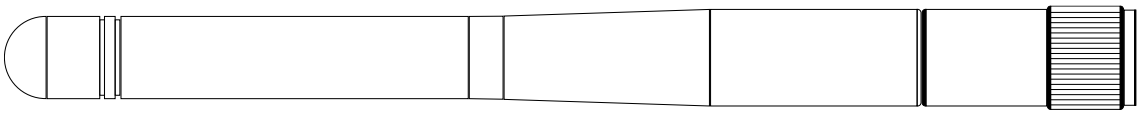

Antenna

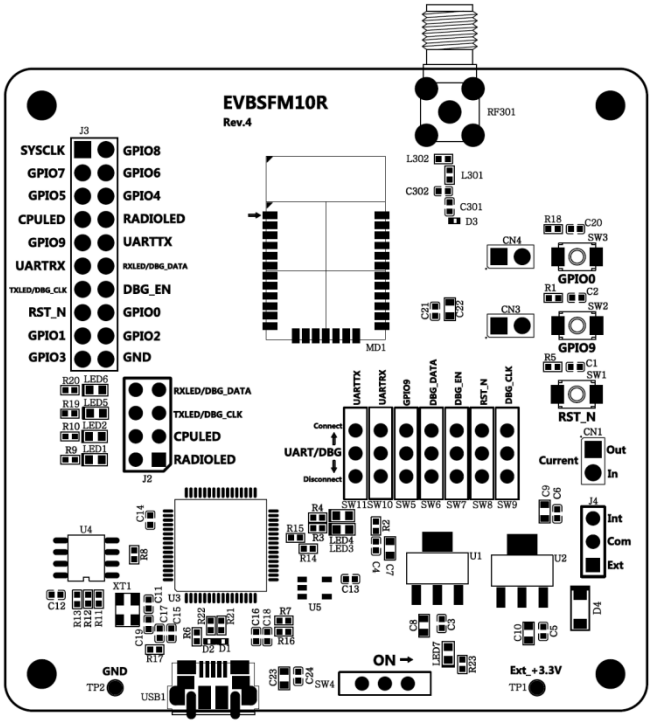

EVBSFM1xRx

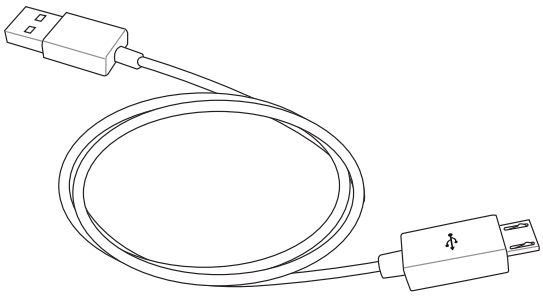

Micro USB cable

[Fig. Evaluation Kit Component]

EVBSFM10R Evaluation Kit Component

1) EVBSFM1xRx: 1EA
2) SMA Antenna: 1EA
3) Micro USB cable: 1EA

EVBSFM1xRx Board

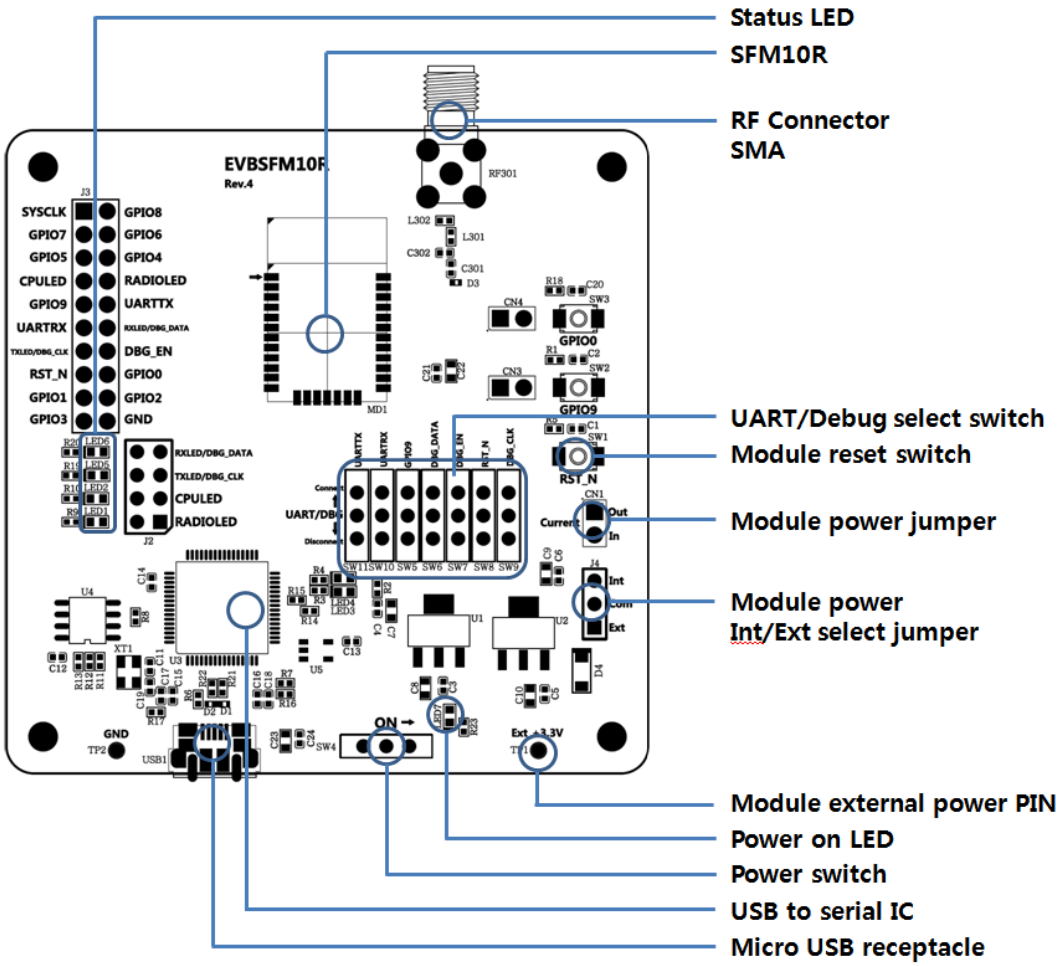

[Fig. EVMSFM1xRx]

- **Status LED:** Debug & Module status LED.
- **SFM10R:** Sigfox module(RC1~RC4)
- **RF Connector SMA:** RF connector for Antenna
- **Debug select switch:** UART/Debug connect switch(↑ : Connect, ↓ : Disconnect)
- **Module reset switch:** SFM1xR H/W reset switch
- **Module power Jumper:** SFM1xR power supply jumper PIN
- **Module power Int/Ext select jumper:** SFM1xR power supply Int/Ext select jumper PIN
- **Module external power PIN:** SFM1xR external power supply PIN(+3.3V supply)
- **Power switch:** Power supply on/off switch (→ : power on, ← : power off)
- **USB to serial IC:** FT2232HL/ FTDI
- **Micro USB receptacle** : Micro USB connector
  - ① Power supply
  - ② Virtual UART interface

Schematic

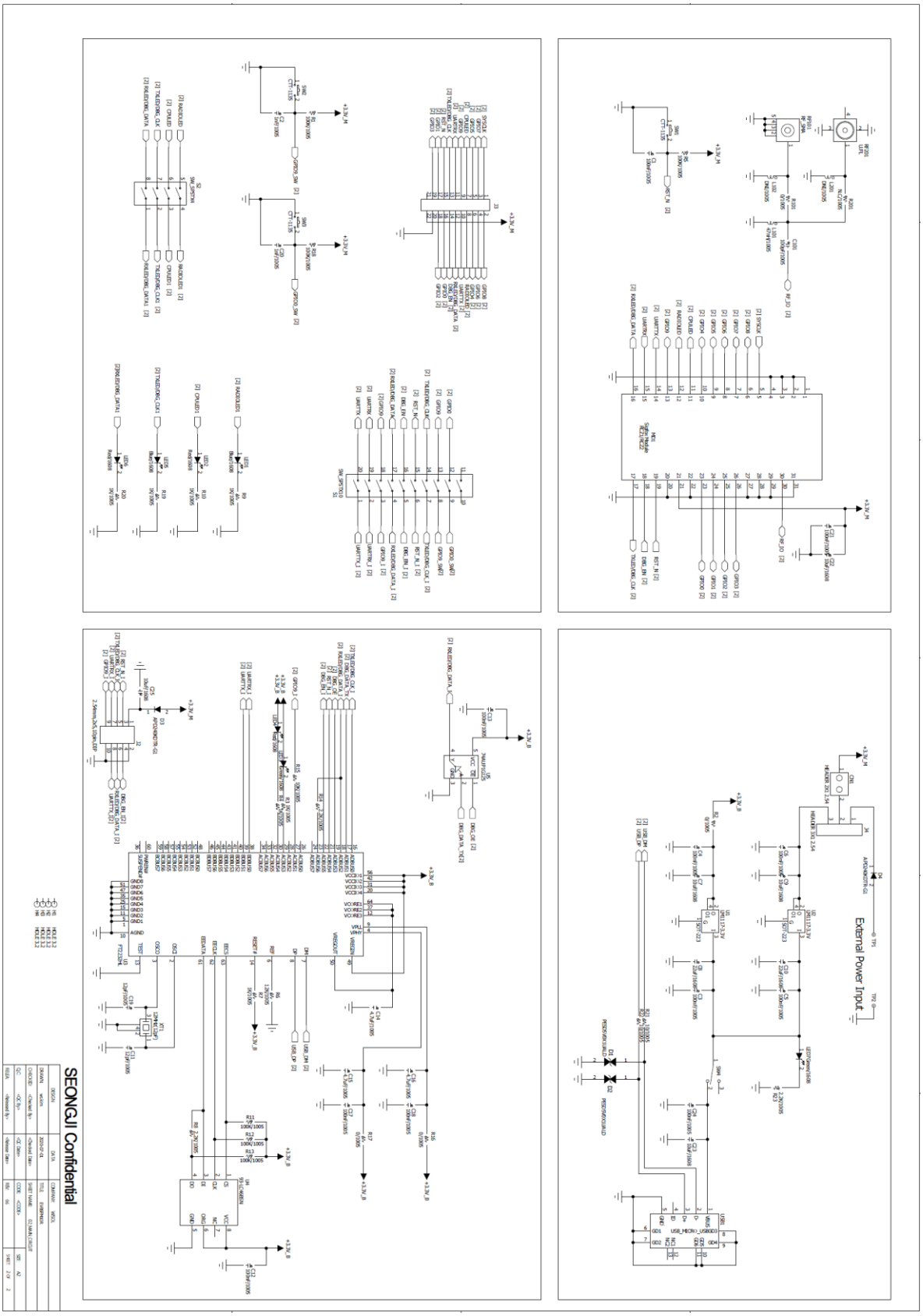

Connector PIN Description

Connector	Pin No.	Pin name	Module Pin No.	Fucntion
J3	1	SYSCLK	5	-
	2	GPIO8	6	General purpose IO
	3	GPIO7	7	General purpose IO Selectable SPI functionality (MISO)
	4	GPIO6	8	General purpose IO Selectable SPI functionality (MOSI)
	5	GPIO5	9	General purpose IO Selectable SPI functionality (SCK)
	6	GPIO4	10	General purpose IO Selectable ∑Δ DAC functionality Selectable clock functionality
	7	CPU_LED	11	CPU activity indicator
	8	RADIO_LED	12	Radio activity indicator
	9	GPIO9	13	General purpose IO Wakeup from deep sleep
	10	UARTTX	14	UART transmit
	11	UARTRX	15	UART receive
	12	RXLED/ DBG_DATA	16	Receive activity indicator
	13	TXLED/ DBG_CLK	17	Transmit activity indicator
	14	DBG_EN	18	-
	15	RST_N	19	Optional reset pin
	16	GPIO0	23	General purpose IO Selectable ADC functionality Selectable ∑Δ DAC functionality Selectable clock functionality
	17	GPIO1	24	General purpose IO Selectable ADC functionality
	18	GPIO2	25	General purpose IO Selectable ADC functionality
	19	GPIO3	26	General purpose IO Selectable ADC functionality
	20	GND	-	Ground

*The GPIO2 and GPIO3 pin should not be used for RC2 and RC4 module and left “Not Connected”.

Test Program

Evaluation board Connection

1. EVBSFM1xR connect to Window PC by USB cable.

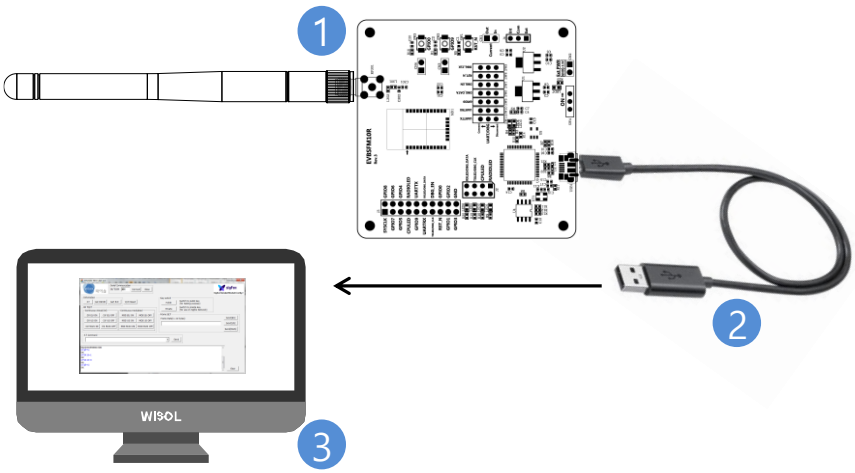

(1) EVBSFM1x
(2) Micro USB cable
(3) Windows PC

[Fig. EVBSFM1xRx connection]

Program execution

1. EVBSFM1xR connected serial-poet in Windows PC, and then check the COM-port number in device manager.

- USB Serial Port(Com□□)

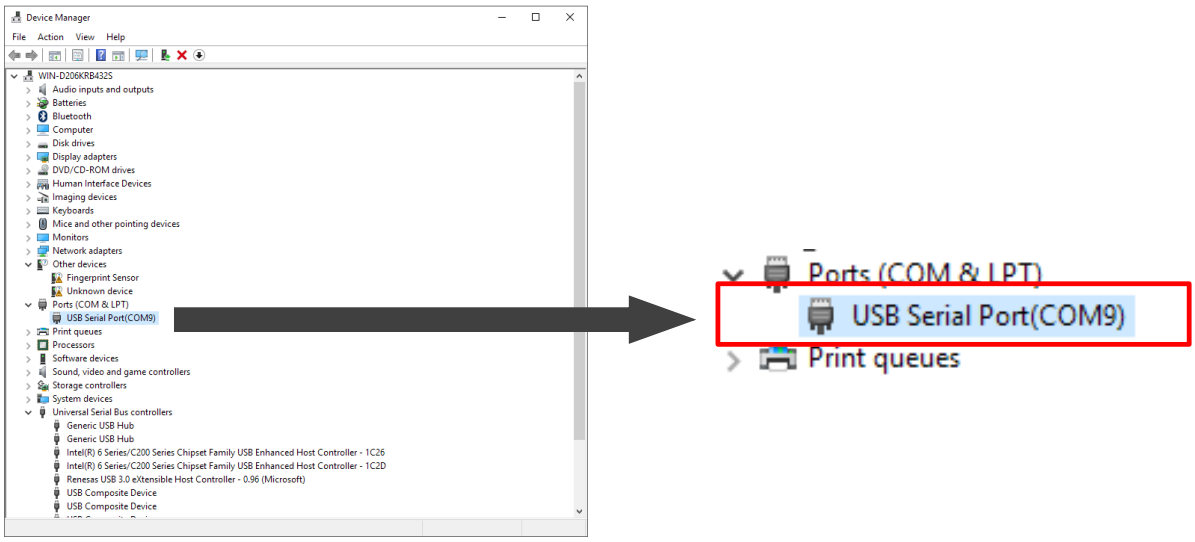

[Fig. EVBSFM10R serial port]

2. Run serial communication program "SFM10R_AT_TEST.exe"
3. Write serial port Number in 'DUTCOM' BOX, and then 'connect' click.

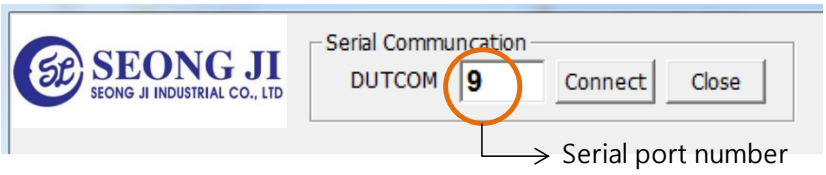

[Fig. EVBSFM10R serial port number]

Install USB driver

1. Execute "CDM21216_Setup.exe" file.

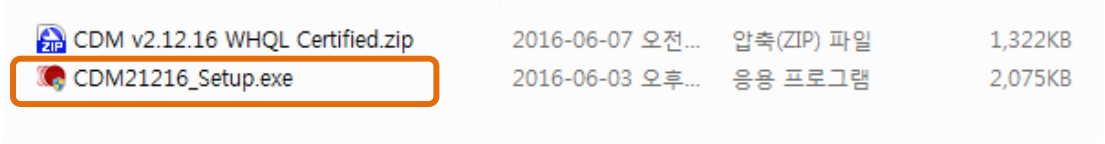

[Fig. USB driver set-up file]

2. Setting device manager in Windows.

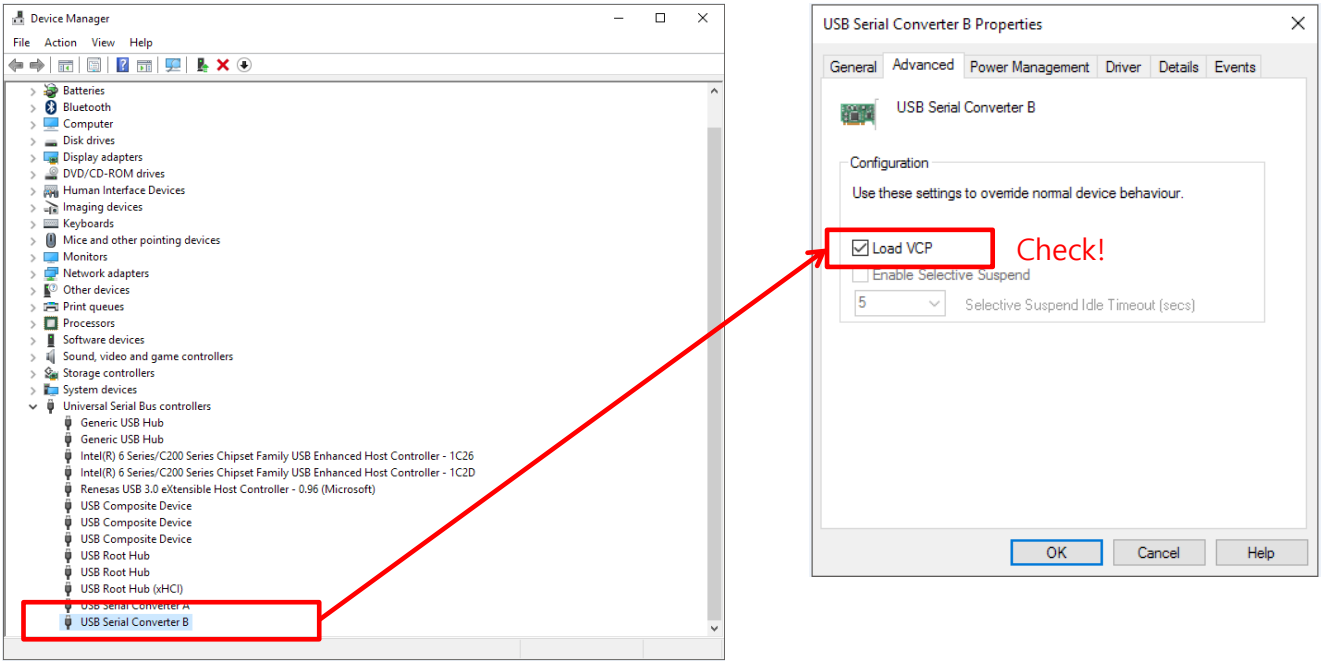

[Fig. Setting device manager]

Test program Description

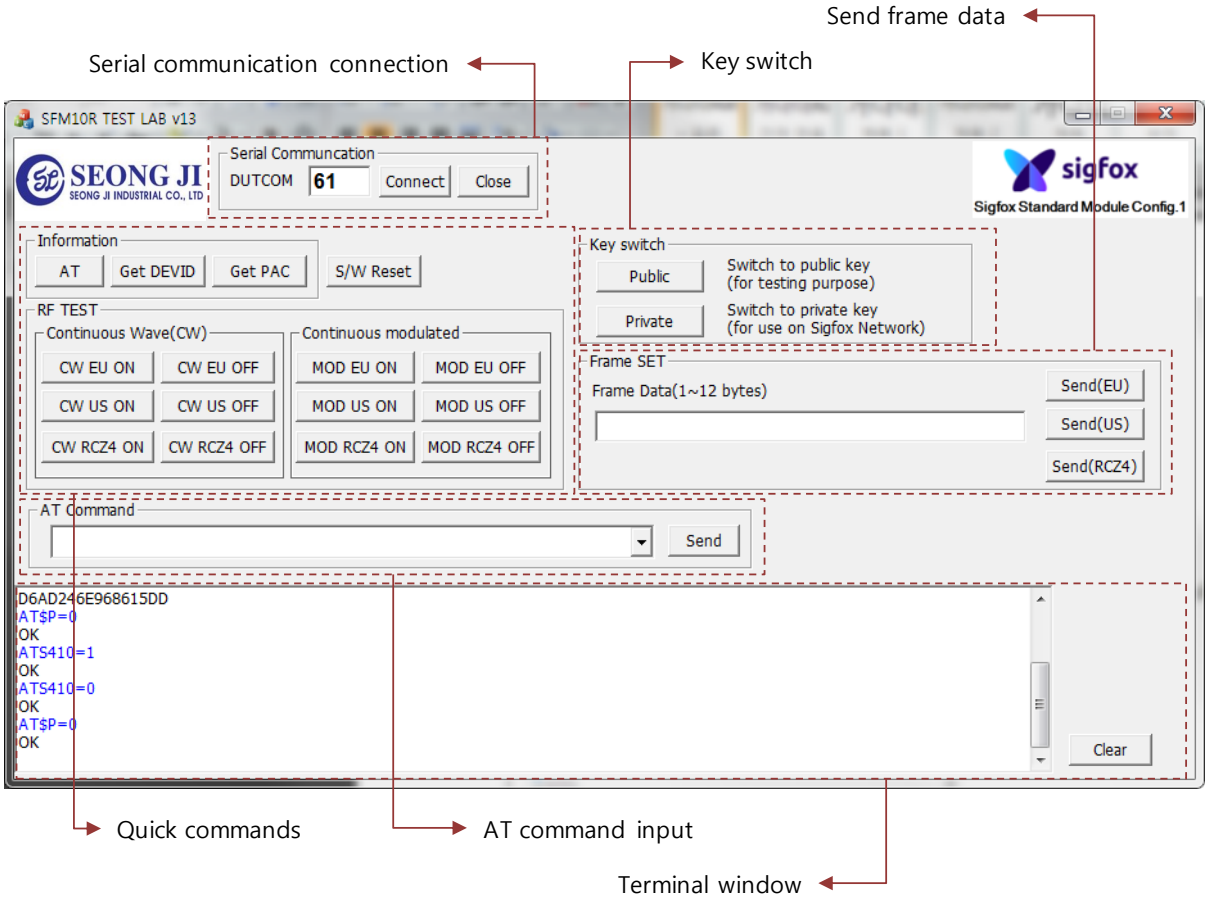

[Fig. Screen of execute Test program]

- Serial Communication
  (1) DUTCOM: Input serial port number of USB
  (2) Connect : Serial port open
  (3) Close: Serial port close

- Quick commands
  (1) AT: Just returns 'OK' and does nothing else. Can be used to check communication.
  (2) Get DEVID: Read Device ID [AT$I=10]
  (3) Get PAC: Read Device PAC [AT$I=11]
  (4) S/W Reset : Software reset [AT$P=0]
  (5) CW_EU_ON: To run Continuous Wave emission tests for RCZ1 module.
  [AT$CW=868130000,1,15]
  (6) CW_EU_OFF: RCZ1 continuous wave Off [AT$CW=868130000,0,15]
  (7) CW_US_ON: To run Continuous Wave emission tests for RCZ2 module.
  [AT$CW=902200000,1,24]

(8) CW_US_OFF: RCZ2 continuous wave Off [AT$CW=902200000,0,24]

(9) CW_RCZ4_ON: To run Continuous Wave emission tests for RCZ4 module.
[AT$CW=920800000,1,24]

(10) CW_RCZ4_OFF: RCZ4 continuous wave Off [AT$CW=920800000,0,24]

(11) MOD_EU_ON: Modulation wave ON for EU

```
AT$IF=868130000
ATS302=15                    // set output power to maximum power level.*
AT$CB=-1,1
```

(12) MOD_US_ON: Modulation wave ON for US

```
AT$IF=902200000
AT$CB=-1,1
```

(13) MOD_RCZ4_ON: Modulation wave ON for RCZ4

```
AT$IF=920800000
AT$CB=-1,1
```

(14) MOD_EU(US/RCZ4)_OFF: Modulation wave Off [AT$CB=-1,0]

(15) Frame Data: Send a SIGFOX message for EU

```
ATS302=15                    // set output power to maximum power level.*
AT$SF= xxxxxxxxxxxx
```

(16) Frame Data: Send a SIGFOX message for US Tx only

```
AT$GI? → return X,Y
If X=0 or Y<3
    AT$RC
AT$SF= xxxxxxxxxxxx
```

(17) Frame Data: Send a SIGFOX message for RCZ4 Tx only

```
AT$GI? → return X,Y
If X=0 or Y<3
    AT$RC
AT$SF= xxxxxxxxxxxx
```

* Execute S/W reset to ensure Tx frequency on payload data sending with Send(XX) button because Tx frequency can be changed when RF TEST buttons executed.

** By default, register 302 is set to 14 level which leads to an output power of 12.5dBm. Use the command ATS302=15 to set the output power to the maximum power level. This register is only accessible for RC1 module.*

- Key switch
  (1) Public: switch to public key [ATS410=1]
  (2) Private: switch to private key [ATS410=0]

AT command complete set

A typical serial terminal emulator can also be used to control the EVK instead of the proposed test SW. In that case the following parameters should be used:

- Speed : 9600 bauds
- Data bits: 8
- Stop bits: 1
- Parity: None

The following table gather all AT command available:

Command	Name	Description
AT	Dummy Command	Just returns 'OK' and does nothing else. Can be used to check communication.
AT$SB=bit[,bit]	Send Bit	Send a bit status (0 or 1). Optional bit flag indicates if AX–SFEU should receive a downlink frame.
AT$SF=frame[,bit]	Send Frame	Send payload data, 1 to 12 bytes. Optional bit flag indicates if AX–SFEU should receive a downlink frame.
AT$SO	Manually send out of band message	Send the out–of–band message.
AT$TR?	Get the transmit repeat	Returns the number of transmit repeats. Default: 2
AT$TR=?	Get transmit range	Returns the allowed range of transmit repeats.
AT$TR=uint	Get transmit repeat	Sets the transmit repeat.
ATSuint?	Get Register	Query a specific configuration register's value. See chapter "Registers" for a list of registers.
ATSuint=uint	Set Register	Change a configuration register.
ATSuint=?	Get Register Range	Returns the allowed range of transmit repeats.
AT$IF=uint	Set TX Frequency	Set the output carrier macro channel for Sigfox frames.
AT$IF?	Get TX Frequency	Get the currently chosen TX frequency.
AT$DR=uint	Set RX Frequency	Set the reception carrier macro channel for Sigfox frames.
AT$DR?	Get RX Frequency	Get the currently chosen RX frequency.
AT$CW=uint,bit[,uint_opt]	Continuous Wave	To run emission tests for Sigfox certification it is necessary to send a continuous wave, i.e. just the base frequency without any modulation. Parameters: **Name** / **Range** / **Description** Frequency / 800000000–999999999, 0 / Continuous wave frequency in Hz. Use 868130000 for Sigfox or 0 to keep previous frequency. Mode / 0, 1 / Enable or disable carrier wave. Power / 0–14 / dBm of signal | Default: 14
AT$CB=uint_opt,bit	Test Mode: TX constant byte	For emission testing it is useful to send a specific bit pattern. The first parameter specifies the byte to send. Use '–1' for a (pseudo–)random pattern. Parameters: **Name** / **Range** / **Decsription** Pattern / 0–255, –1 / Byte to send. Use '–1' for a (pseudo–)random pattern. Mode / 0, 1 / Enable or disable pattern test mode.
AT$T?	Get Temperature	Measure internal temperature and return it in 1/10th of a degree Celsius.
AT$V?	Get Voltages	Return current voltage and voltage measured during the last transmission in mV.

Command	Name	Description
AT$I=uint	Information	Display various product information: 0: Software Name & Version Example Response: AX-SFEU 1.0.6-ETSI 1: Contact Details Example Response: support@axsem.com 2: Silicon revision lower byte Example Response: 8F 3: Silicon revision upper byte Example Response: 00 4: Major Firmware Version Example Response: 1 5: Minor Firmware Version Example Response: 0 7: Firmware Variant (Frequency Band etc. (EU/US)) Example Response: ETSI 8: Firmware VCS Version Example Response: v1.0.2-36 9: SIGFOX Library Version Example Response: DL0-1.4 10: Device ID Example Response: 00012345 11: PAC Example Response: 0123456789ABCDEF
AT$P=uint	Set Power Mode	To conserve power, the AX-SFEU can be put to sleep manually. Depending on power mode, you will be responsible for waking up the AX-SFEU again! 0: software reset (settings will be reset to values in flash) 1: sleep (send a break to wake up) 2: deep sleep (toggle GPIO9 or RESET_N pin to wake up; the AX-SFEU is not running and all settings will be reset!)
AT$WR	Save Config	Write all settings to flash (RX/TX frequencies, registers) so they survive reset/deep sleep or loss of power. Use AT$P=0 to reset the AX-SFEU and load settings from flash.
AT:Pn?	Get GPIO Pin	Return the setting of the GPIO Pin *n*; *n* can range from 0 to 9. A character string is returned describing the mode of the pin, followed by the actual value. If the pin is configured as analog pin, then the voltage (range 0…1 V) is returned. The mode characters have the following meaning: **Mode** **Description** 0 Pin drives low 1 Pin drives high Z Pin is high impedance input U Pin is input with pull-up A Pin is analog input (GPIO pin 0…3 only) T Pin is driven by clock or DAC (GPIO pin 0 and 4 only) The default mode after exiting reset is U on all GPIO pins.
AT:Pn=?	Get GPIO Pin Range	Print a list of possible modes for a pin. The table below lists the response. **Pin** **Modes** P0 0, 1, Z, U, A, T P1 0, 1, Z, U, A P2 0, 1, Z, U, A P3 0, 1, Z, U, A P4 0, 1, Z, U, T P5 0, 1, Z, U P6 0, 1, Z, U P7 0, 1, Z, U P8 0, 1, Z, U P9 0, 1, Z, U
AT:Pn=mode	Set GPIO Pin	Set the GPIO pin mode. For a list of the modes see the command AT:Pn?

Command	Name	Description
AT:ADC Pn[–Pn[(1V|10V)]]?	Get GPIO Pin Analog Voltage	Measure the voltage applied to a GPIO pin. The command also allows measurement of the voltage difference across two GPIO pins. In differential mode, the full scale range may also be specified as 1 V or 10 V. Note however that the pin input voltages must not exceed the range 0..VDD_IO. The command returns the result as fraction of the full scale range (1 V if none is specified). The GPIO pins referenced should be initialized to analog mode before issuing this command.
AT:SPI[(A|B|C|D)]=bytes	SPI Transaction	This command clocks out *bytes* on the SPI port. The clock frequency is 312.5 kHz. The command returns the bytes read on MISO during output. Optionally the clocking mode may be specified (default is A): **Mode** / **Clock Inversion** / **Clock Phase** A: normal / normal B: normal / alternate C: inverted / normal D: inverted / alternate 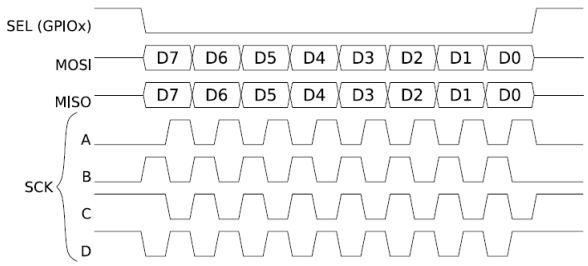 Note that SEL, if needed, is not generated by this command, and must instead be driven using standard GPIO commands (AT:Pn=0|1).
AT:CLK=freq,reffreq	Set Clock Generator	Output a square wave on the pin(s) set to T mode. The frequency of the square wave is (freq / 2^{16}) × reffreq. Possible values for reffreq are 20000000, 10000000, 5000000, 2500000, 1250000, 625000, 312500, 156250. Possible values if freq are 0…65535.
AT:CLK=OFF	Turn off Clock Generator	Switch off the clock generator
AT:CLK?	Get Clock Generator	Return the settings of the clock generator. Two numbers are returned, freq and reffreq.
AT:DAC=value	Set ΣΔ DAC	Output a ΣΔ DAC value on the pin(s) set to T mode. Parameter value may be in the range –32768…32767. The average output voltage is (1/2 + value / 2^{17}) × VDD. An external low pass filter is needed to get smooth output voltages. The modulation frequency is 20 MHz. A possible low pass filter choice is a simple RC low pass filter with R = 10 kΩ and C = 1 μF.
AT:DAC=OFF	Turn off ΣΔ DAC	Switch off the DAC
AT:DAC?	Get ΣΔ DAC	Return the DAC value

Command	Name	Description
AT$TM=mode,config	Activates the Sigfox Testmode	Available test modes: 0. TX BPSK Send only BPSK with Synchro Bit + Synchro frame + PN sequence: No hopping centered on the TX_frequency. Config bits 0 to 6 define the number of repetitions. Bit 7 of config defines if a delay is applied of not in the loop 1. TX Protocol: Tx mode with full protocol with Sigfox key: Send Sigfox protocol frames with initiate downlink flag = True. Config defines the number of repetitions. 2. RX Protocol: This mode tests the complete downlink protocol in Downlink only. Config defines the number of repetitions. 3. RX GFSK: RX mode with known pattern with SB + SF + Pattern on RX_frequency (internal comparison with received frame ⇔ known pattern = AA AA B2 27 1F 20 41 84 32 68 C5 BA AE 79 E7 F6 DD 9B. Config defines the number of repetitions. Config defines the number of repetitions. 4. RX Sensitivity: Does uplink + downlink frame with Sigfox key and specific timings. This test is specific to SIGFOX's test equipments & softwares. 5. TX Synthesis: Does one uplink frame on each Sigfox channel to measure frequency synthesis step
AT$SE	Starts AT$TM–3,255 indefinitely	Convenience command for sensitivity tests
AT$SL[=frame]	Send local loop	Sends a local loop frame with optional payload of 1 to 12 bytes. Default payload: 0x84, 0x32, 0x68, 0xC5, 0xBA, 0x53, 0xAE, 0x79, 0xE7, 0xF6, 0xDD, 0x9B.
AT$RL	Receive local loop	Starts listening for a local loop.

Registers

RC1 module

Number	Name	Description	Default	Range	Units
300	Out Of Band Period	AX-SFEU sends periodic static messages to indicate that they are alive. Set to 0 to disable.	24	0–24	hours
302	Power Level	The output power of the radio.	14	0–14	dBm

RC2/4 module

Number	Name	Description	Default	Range	Units
300	Out Of Band Period	AX-SFUS sends periodic static messages to indicate that they are alive. Set to 0 to disable.	24	0–24	hours
400	Macrochannel Mask	The mask of Macrochannels to use.	<000001FF> <00000000> <00000000>,1		
410	Encryption Key Configuration	Set to zero for normal operation. Set to one for use with the SIGFOX Network Emulator Kit (SNEK)	0	0–1	0: private key 1: public key

RC3 module

Number	Name	Description	Default	Range	Units
300	Out Of Band Period	AX-SFJK sends periodic static messages to indicate that they are alive. Set to 0 to disable.	24	0–24	hours
400	LBT Mask	LBT configurations to be used.	<1> <15000> <0>,0		
410	Encryption Key Configuration	Set to zero for normal operation. Set to one for use with the SIGFOX Network Emulator Kit (SNEK)	0	0–1	0: private key 1: public key
800	LBT RSSI Offset	Shifts the carrier sense threshold. Positive values result in a lower threshold.	0	−128–127	dB

Specific recommendation for each module

RC1 module (SFM10R1)

- Default output power is set to 12.5dBm.
  To set the output power to 14dBm, use <ATS302=15> before sending a SIGFOX frame.
- To send a frame the following procedure should be followed

  AT$SF= xxxxxxxxxxxx

RC2 module (SFM1xR2)

- The output power is set to 22dBm and cannot be adjusted.
- To send a frame the following procedure should be followed

  AT$GI? → return X,Y

  If X=0 or Y<3

  AT$RC

  AT$SF= xxxxxxxxxxxx

  This procedure will force the module to send the frame within the macro channel listened by SIGFOX network.
- To send a frame with a downlink request, the following procedure should be followed:

  AT$RC

  AT$SF= xxxxxxxxxxxx,1

RC3 module (SFM11R3)

- Default output power is set to 12.5dBm.
- To send a frame the following procedure should be followed

  AT$SF= xxxxxxxxxxxx

RC4 module (SFM10R4)

- The output power is set to 22dBm and cannot be adjusted.
- To send a frame the following procedure should be followed

  AT$GI? → return X,Y

  If X=0 or Y<3

  AT$RC

  AT$SF= xxxxxxxxxxxx

  This procedure will force the module to send the frame within the macro channel listened by SIGFOX network.
- To send a frame with a downlink request, the following procedure should be followed:

  AT$RC

  AT$SF= xxxxxxxxxxxx,1